Scrapwood Jewelry Box

This Jewelry box simple, elegant, and features barrel hinges and a soft flocked interior. Perhaps best of all, you can make it using all of those shop scraps you have sitting in the shop!
Plan includes both a flat top design and a curved top design.

Design: Marc Spagnuolo & Dave Knipfer
Plans: Marc Spagnuolo & Brian Benham
Copyright © 2016, The Wood Whisperer, Inc. TheWoodWhisperer.com
Version 1

The Wood Whisperer .com

Cut List

Section	Part ID	Part Description	Material	QTY	Width	Length	Thickness
Curved Box	A	Ends	Variable	2	2“	3 3/4”	1/2“
	B	Base	Variable	1	3 1/2”	9 1/4”	1”
	C	Top	Variable	1	3 1/2“	8 3/4”	3/4“

Section	Part ID	Part Description	Material	QTY	Width	Length	Thickness
Flat Box	A	Ends	Variable	2	1 7/8“	3 3/4”	1/2“
	B	Base	Variable	1	3 1/2”	9 1/4”	1”
	C	Top	Variable	1	3 1/2“	8 3/4”	1/2“

Note 1: Material thickness will vary depending on the scrap you have in your shop. Just make sure you can get the finished dimensions listed above.

Additional Materials Needed:
1 pair of barrel hinges
Flocking tube, glue, and fiber (optional)

Exploded View

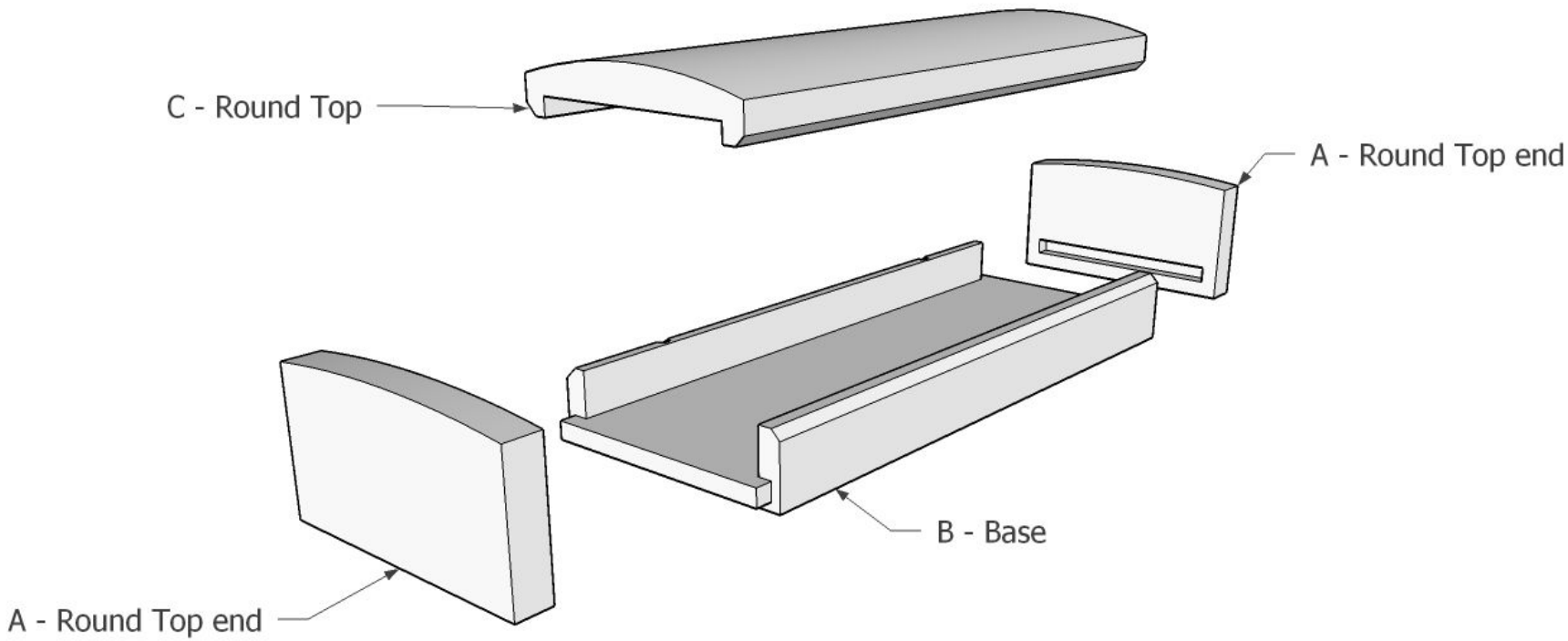

End Detail

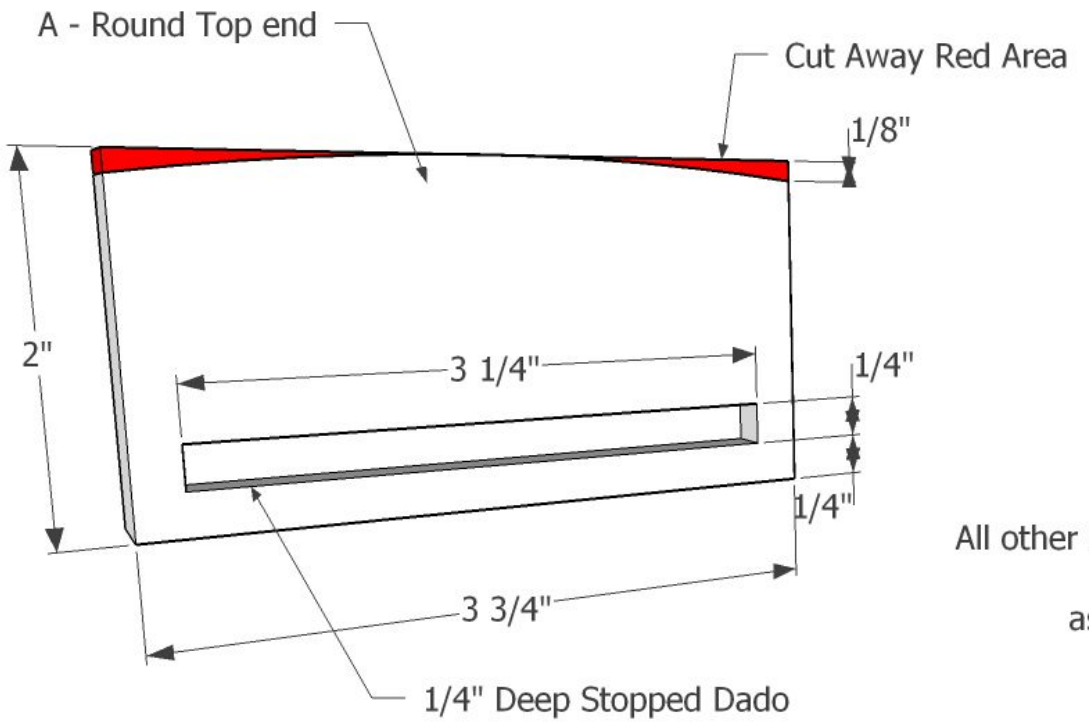
A - Round Top end
Cut Away Red Area
1/8"
2"
3 1/4"
1/4"
1/4"
3 3/4"
1/4" Deep Stopped Dado

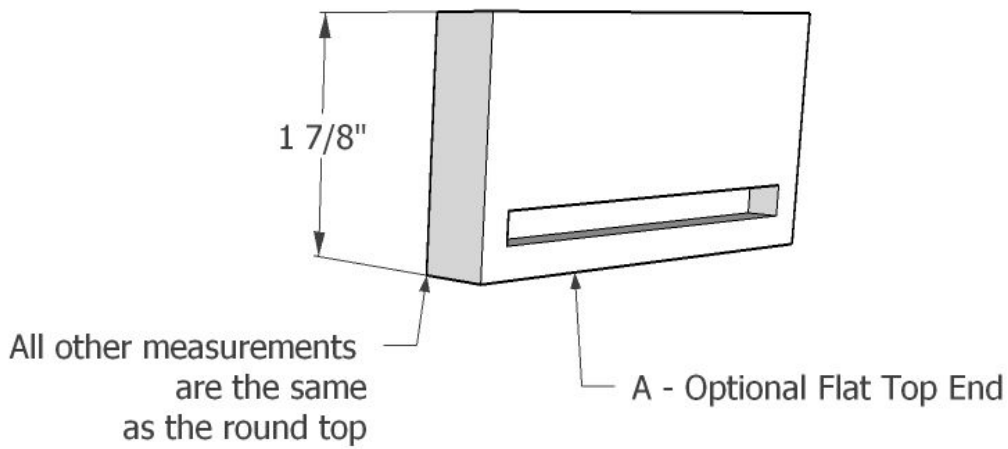
1 7/8"
All other measurements
are the same
as the round top
A - Optional Flat Top End

Top Detail

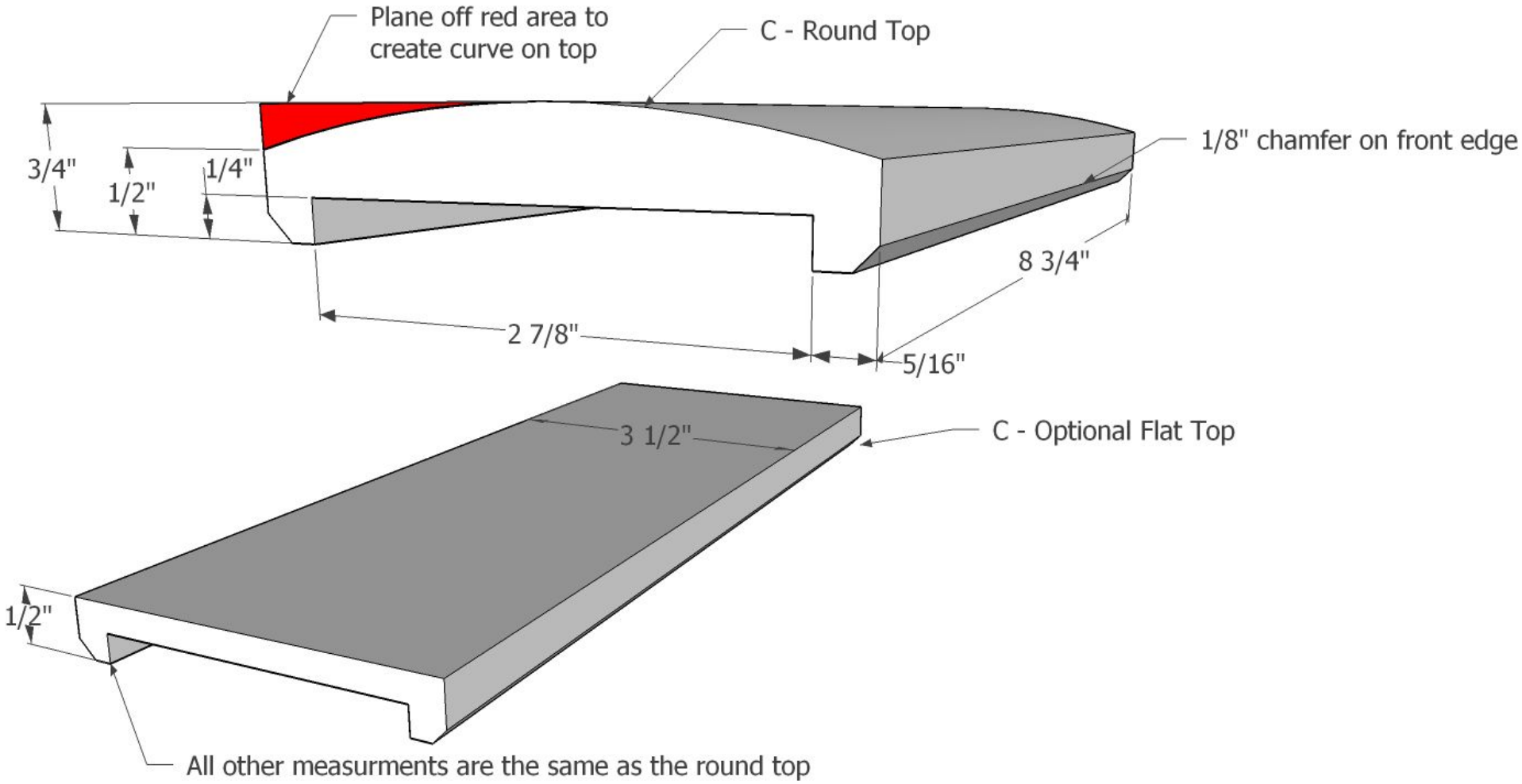
Plane off red area to create curve on top
C - Round Top
1/8" chamfer on front edge
3/4"
1/2"
1/4"
8 3/4"
2 7/8"
5/16"
3 1/2"
C - Optional Flat Top
1/2"
All other measurments are the same as the round top

Hinge Location

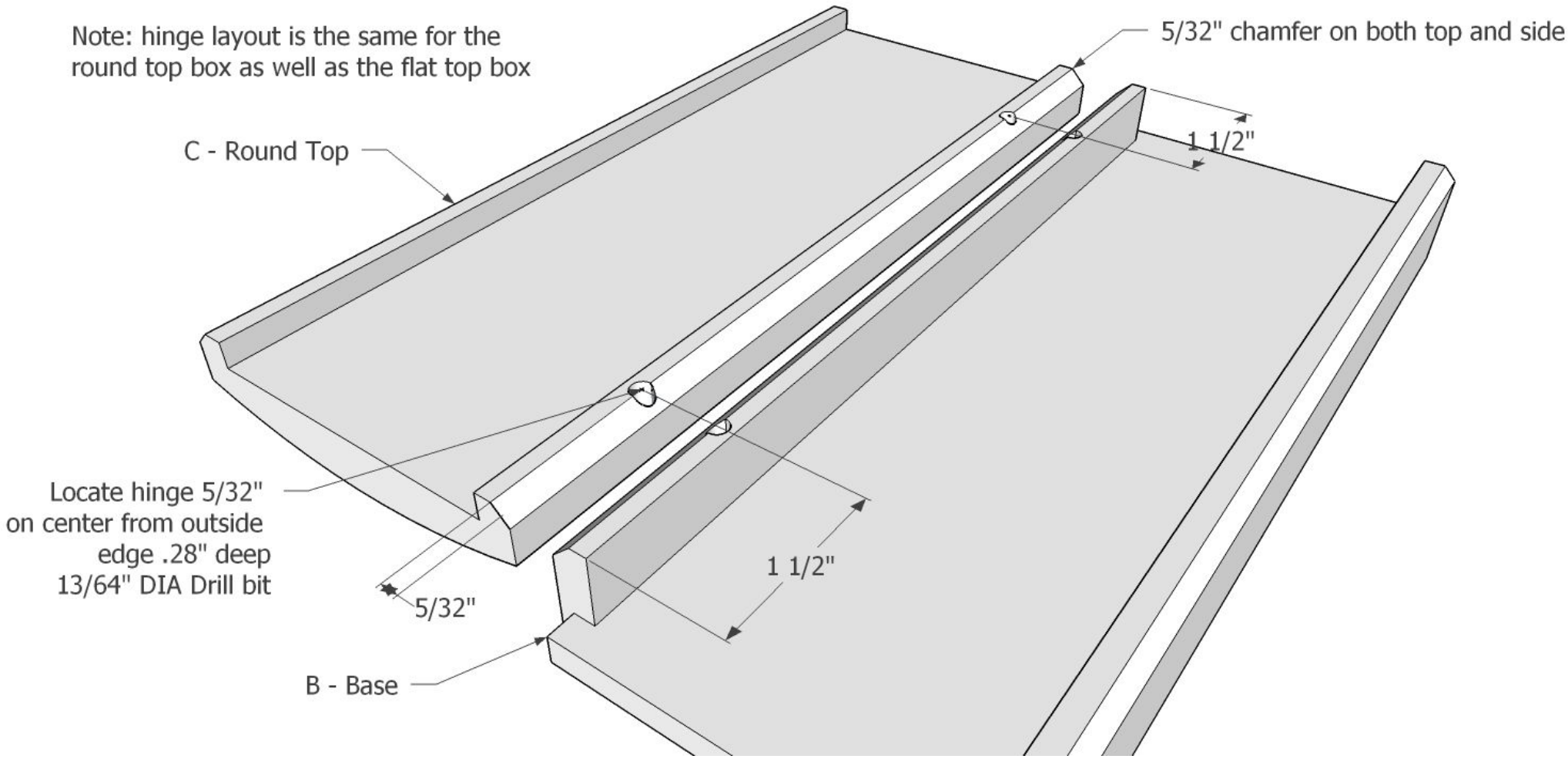

Base Detail

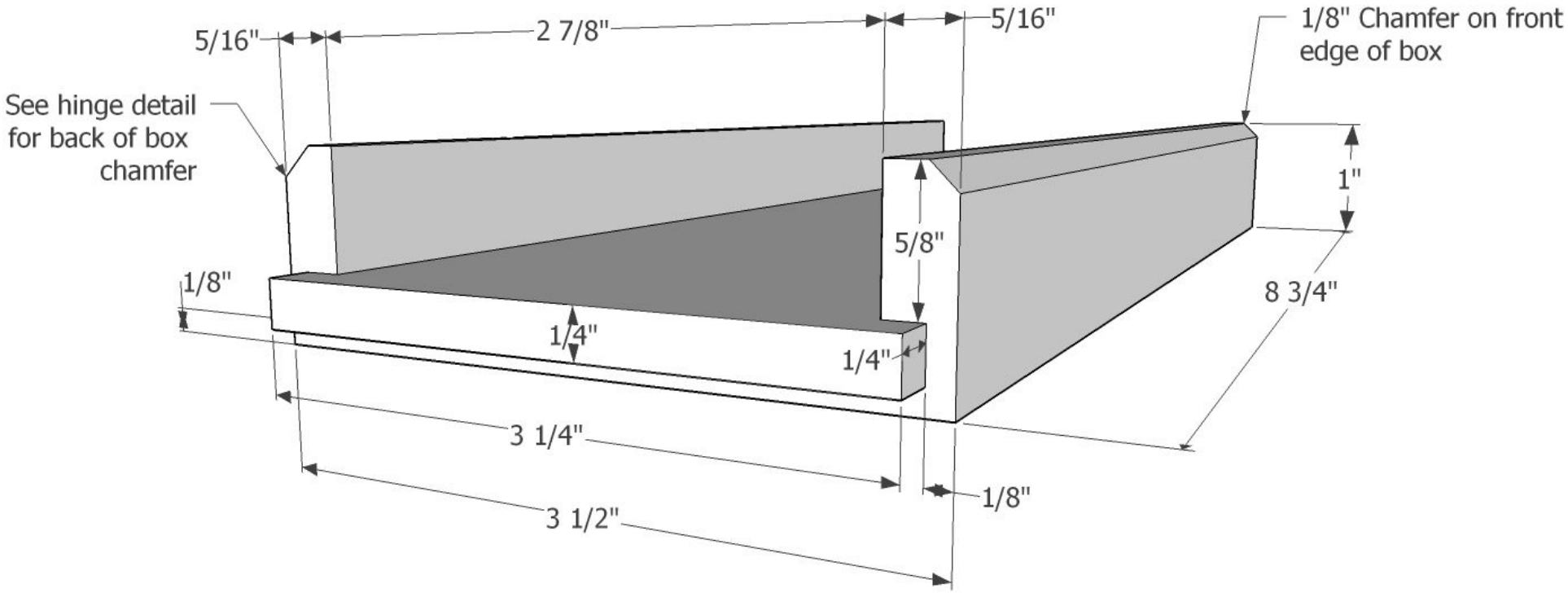
5/16"
2 7/8"
5/16"
1/8" Chamfer on front edge of box
See hinge detail for back of box chamfer
1"
5/8"
1/8"
8 3/4"
1/4"
1/4"
3 1/4"
1/8"
3 1/2"